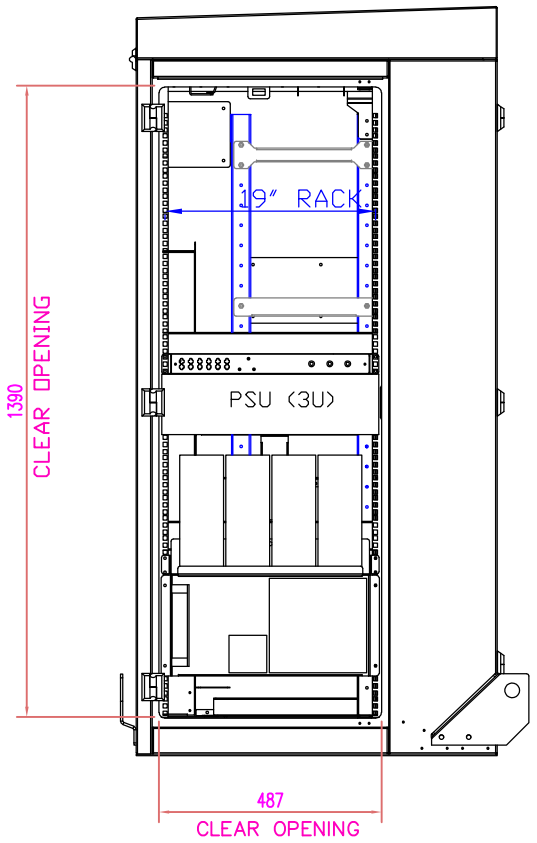

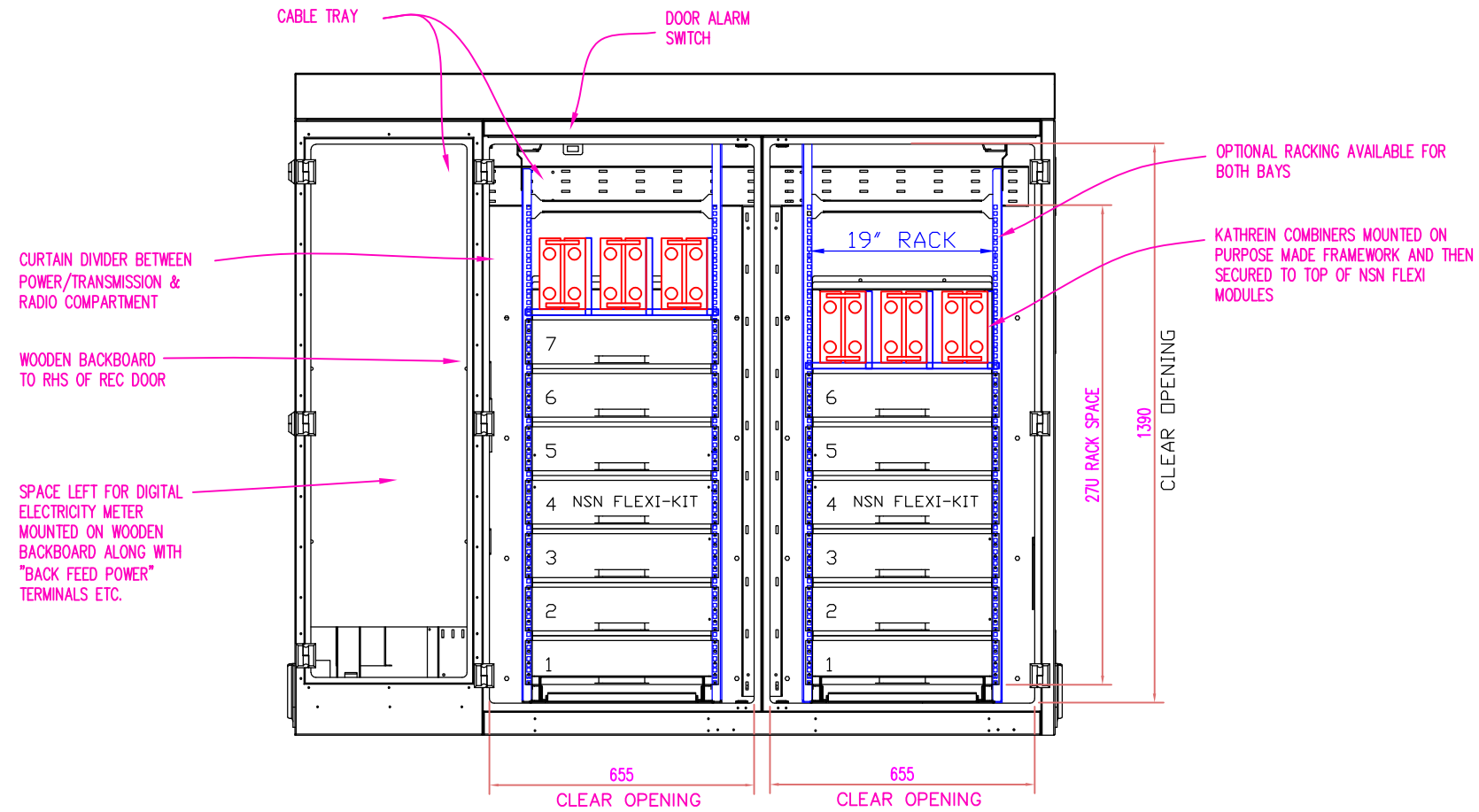

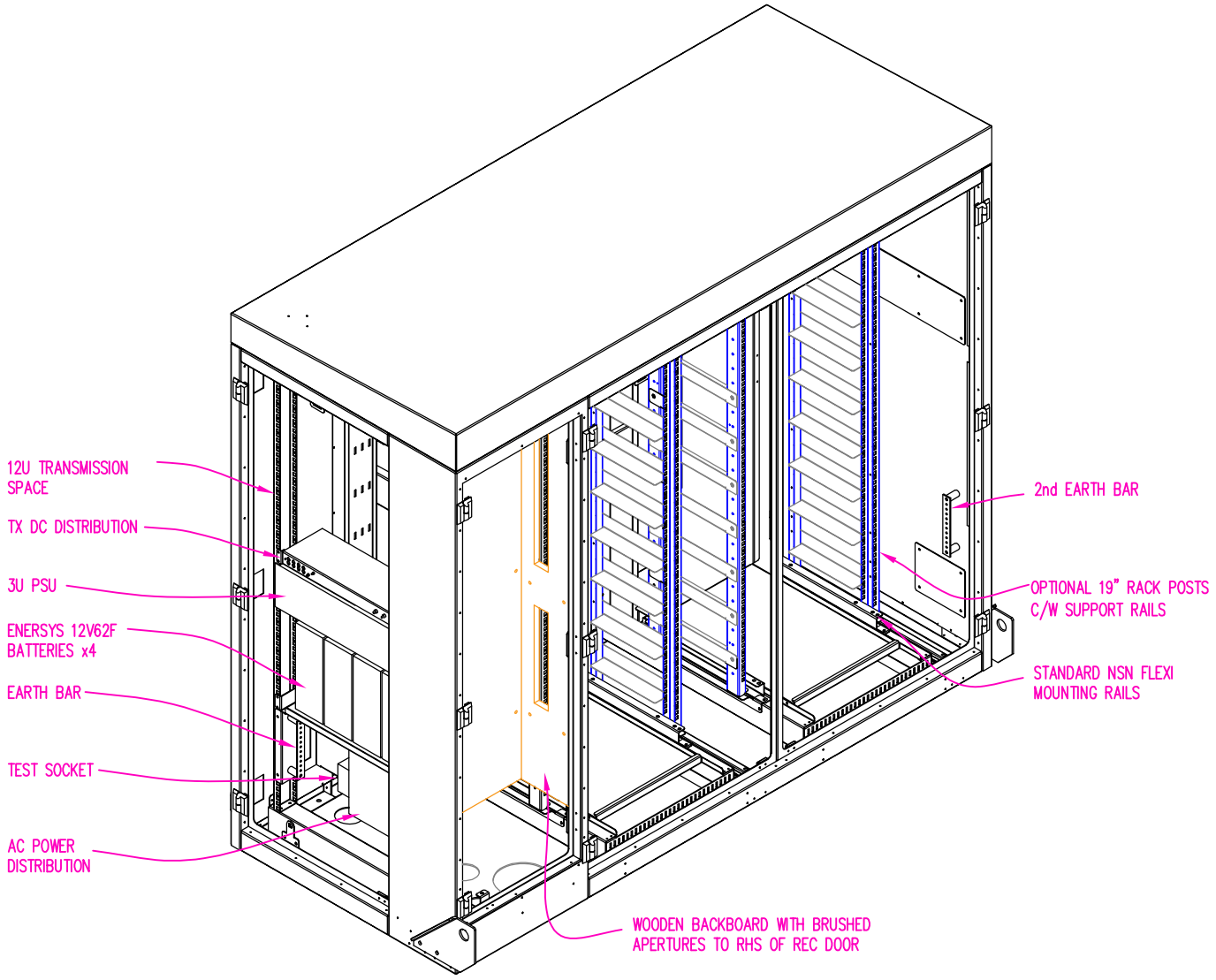

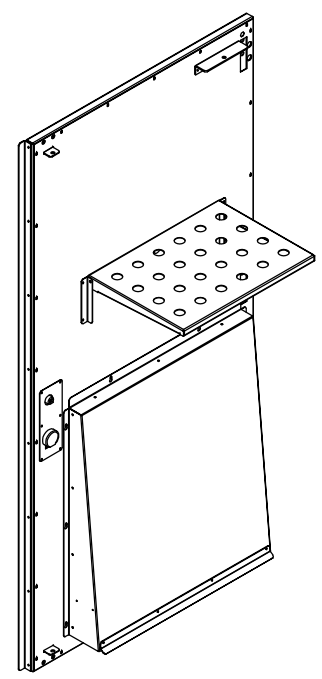

SHELF IN OPEN POSITION

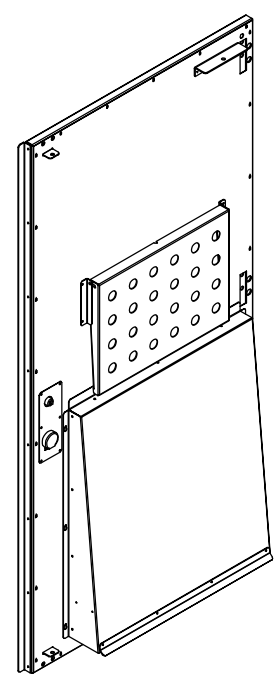

SHELF IN CLOSED POSITION

LAPTOP SHELF ON MIDDLE FRONT DOOR

No.	Revision	Date	By	Ckd
–	INITIAL ISSUE	31.07.19	B.R.	A.G.

Delmec

GA

Title
T380 STANDARD DETAILS
STANDARD CABINET
INTERNAL VIEW

Designed	Date 31.07.2019	
Drawn B.R.	Scale N.T.S.	Rev. —
Dwg No. T380-02		

THIS DRAWING IS THE PROPERTY OF DELMEC AND MUST NOT BE COPIED, TRACED OR REPRODUCED WITOUT THEIR PERMISSION.