Scale 1:100 [m]

0 1 2 3 4 5 10

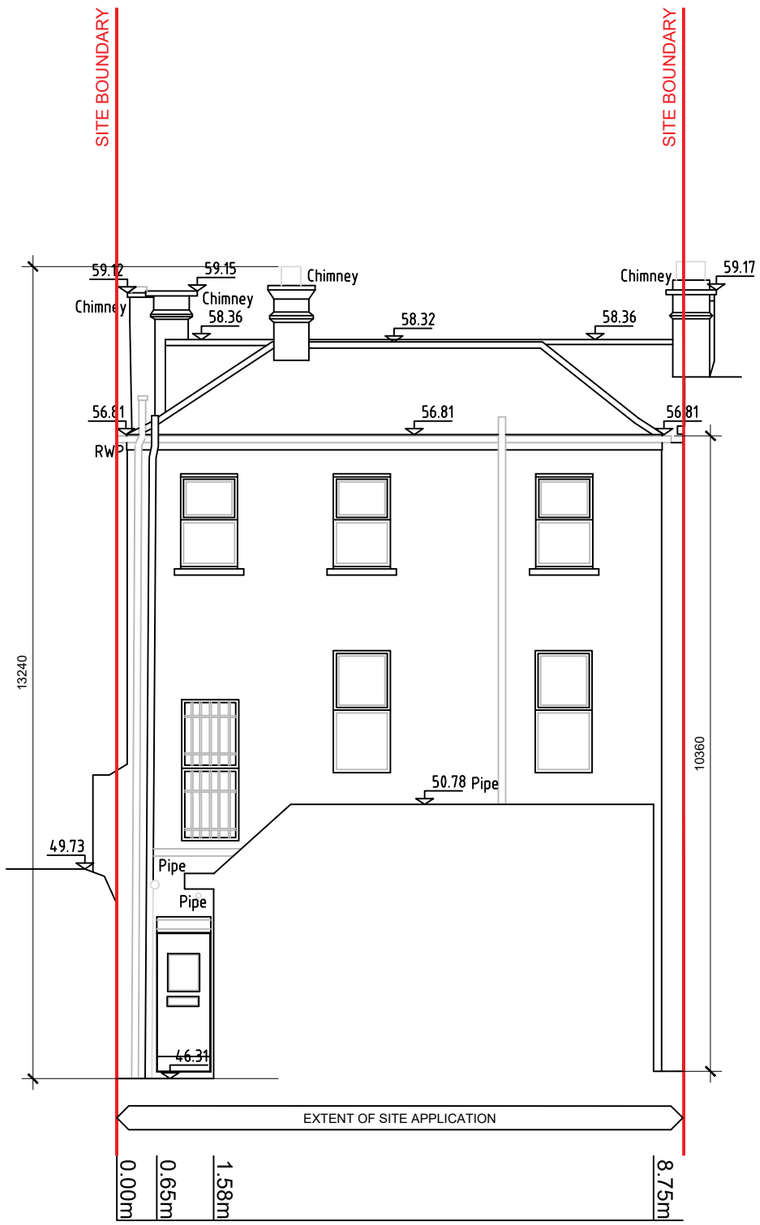

Elevation 5

Datum : 44.00m

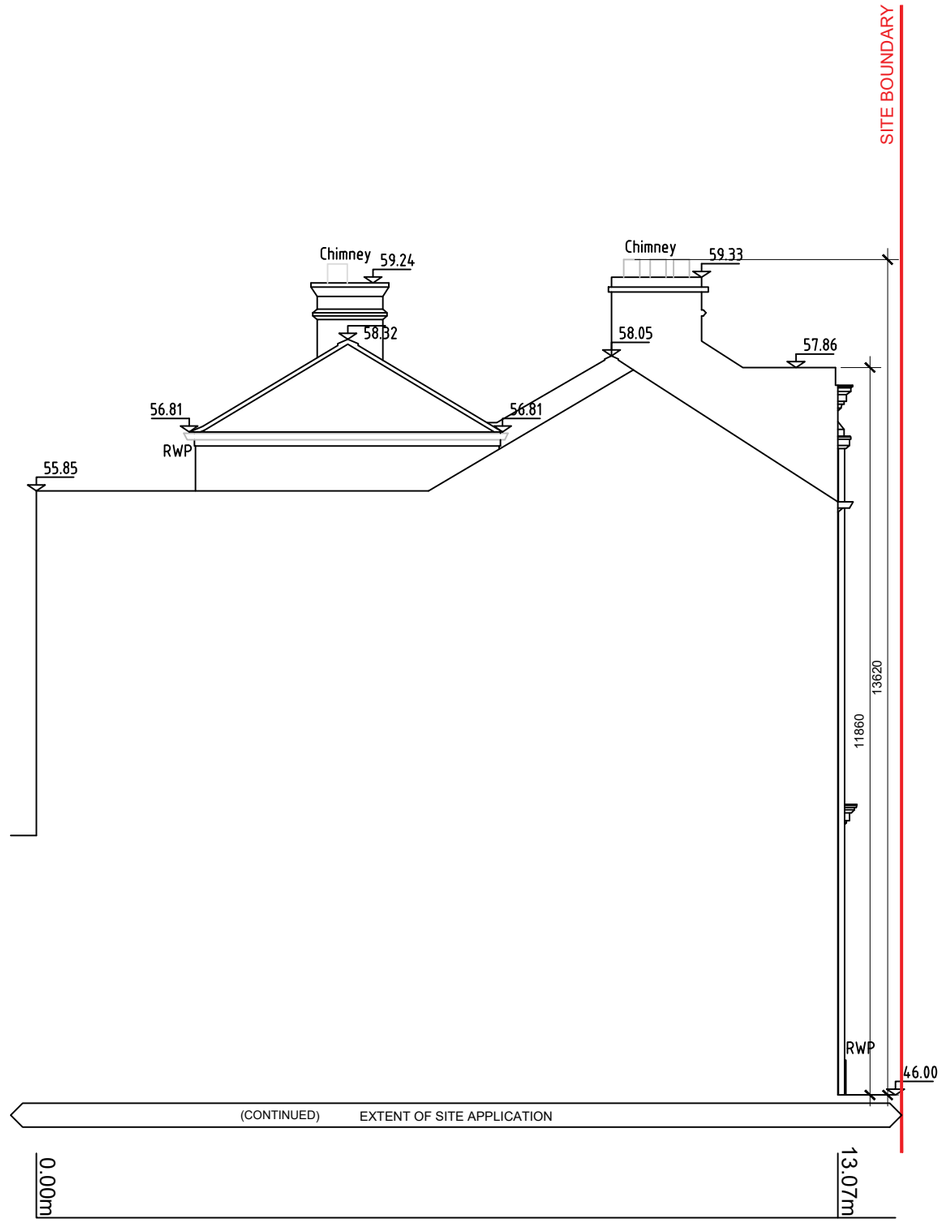

Elevation 6

Datum : 44.00m

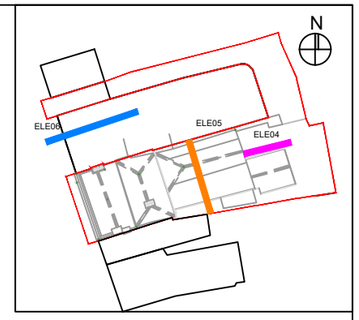

KEY PLAN: ELEVATION NO's
(NTS- Reference only)

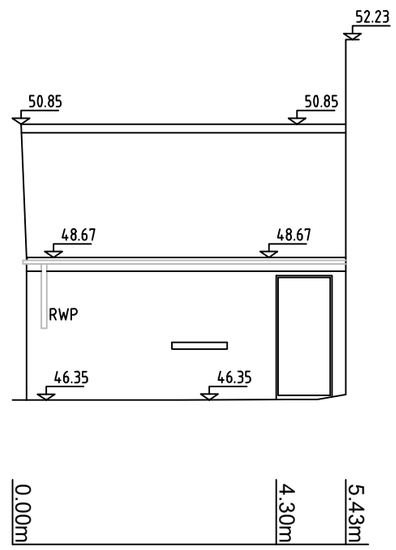

Elevation 4

Datum : 44.00m

- THIS DRAWING TO BE READ IN CONJUNCTION WITH ALL OTHER ARCHITECTURAL AND ENGINEERING DRAWINGS AND ALL OTHER RELEVANT DRAWINGS AND SPECIFICATIONS.
- DO NOT SCALE THIS DRAWING USE FIGURED DIMENSIONS ONLY.
- NO PART OF THIS DOCUMENT MAY BE REPRODUCED OR TRANSMITTED IN ANY FORM OR STORED IN ANY RETRIEVAL SYSTEM OF ANY NATURE WITHOUT THE WRITTEN PERMISSION OF LONGFORD COUNTY COUNCIL AS COPYRIGHT HOLDER EXCEPT AS AGREED FOR USE ON THE PROJECT FOR WHICH THE DOCUMENT WAS ORIGINALLY ISSUED.

C:\Users\mcassidy\AppData\Local\Autodesk\AutoCAD LT 2024\R30\enu\Template\LCC Drawing Template MC - A1 & A3.dwt

Rev. No.	Date	Revision Notes	Drn. by	Chkd. by

AN LONGFORT CONNECTED
Comhairle Chontae An Longfoirt
Longford County Council
People - Place - Opportunity

Copyright Acknowledgements
CYAL50380265© Tailte Éireann.

Unauthorised reproduction infringes Tailte Éireann copyright.

KEY:
SITE BOUNDARY
OWNERSHIP BOUNDARY

COMHAIRLE CHONTAE LONGFOIRT

LONGFORD COUNTY COUNCIL

GREAT WATER STREET
LONGFORD
Tel. (043) 46231

Client :	*Longford County Council*		
Project :	*Former Longford Post Office Building Re-development*		
Title :	*Existing Elevation 04, 05, 06*		
Drawing No: *034*			Revision: 00
Scale: *1:100 @ A3*	Date: *19/06/2025*		Status: DRAFT
Drawn by: M.Cassidy	Checked: C.R		Approved: P.N